D2 DISPLACEMENT SENSOR

Keynotes and Installation Guide

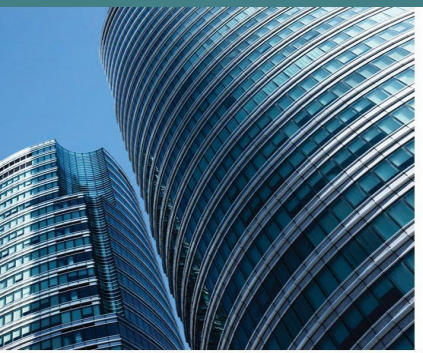

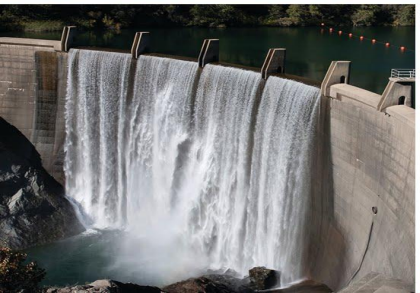


optromix

FBG Technology

Fiber Bragg grating (FBG) sensors are often used as sensing elements for displacement measurements, because they are resistant to electromagnetic interference, corrosion, on top of that, they are compact and they have high sensitivity.

FBG displacement sensors, unlike strain and temperature, can't measure quantity using only fiber optic sensors; it utilizes FBG response to its equivalent Bragg wavelength. Displacement sensor measures structural deformation estimation using the strain data.

D2 Sensor can be installed on the structure surface and measures the distance between two anchor points. It can be used in a combination with additional components to determine soil displacement. It can be used to monitor extension and compression displacement. Fiber optic displacement sensors are widely used to measure the gaps in bridges, buildings, roads, dams and other constructions. Fiber Bragg displacement sensors are more durable and provide long-term safety compared to any traditional sensors.

D2 Technical Parameters

This sensor is designed to measure displacements, cracks, and expansion joints over 50 mm range. The sensor has a protective aluminum case. It can be mounted directly on concrete or metal surfaces.

Main technical parameters:

Measurement Range	0 – 50 mm
Accuracy	0.03 mm in steady-state environment
Operating Temperature Range	-40..+80 °C
Water Resistance	IP67 rating
Fatigue Life	> 10,000,000 cycles @ 40 mm stroke
Maximum Speed	1050 mm/sec
Probe Actuation Force	~ 10 N
Weight	1.0 kg
Dimensions	152.4 x 76.2 x 44.5 mm
Cable Type	Terminate inside gage. Gage accepts two cables between 3 to 7 mm diameter
FBG Properties	
Peak Reflectivity	> 70%
FWHM (at the level of -3dB)	0.25 ± 0.05 nm
Isolation	> 15 dB

D2 Key Features

D2 displacement sensor is specifically designed to measure displacement between two gage points on a specimen surface. The gage design is flexible enough to allow for easy attachment to various substrates, making measurements on metal, concrete and other surfaces straightforward. The two FBG sensors that comprise the D2 gage are located within the rugged hard-coat anodized aluminum enclosure which shields them from the elements and allows for installations in harsh environments.

D2 sensor provides you with the following features:

- Up to 50 mm measurement range using a 9.5 mm stainless steel rod.
- Rugged aluminum enclosure suitable for outdoor installations, IP67 rating.
- Qualified to same rigorous standards used for comparable electronic gages.
- Internal protection of connectors/splices.
- Supports multiplexing of multiple gages on one fiber.
- Fully temperature compensated over entire operating range.
- Fast response time, stable measurements, high resolution.
- Designed for simple installation in a variety of applications.

D2 Drawing

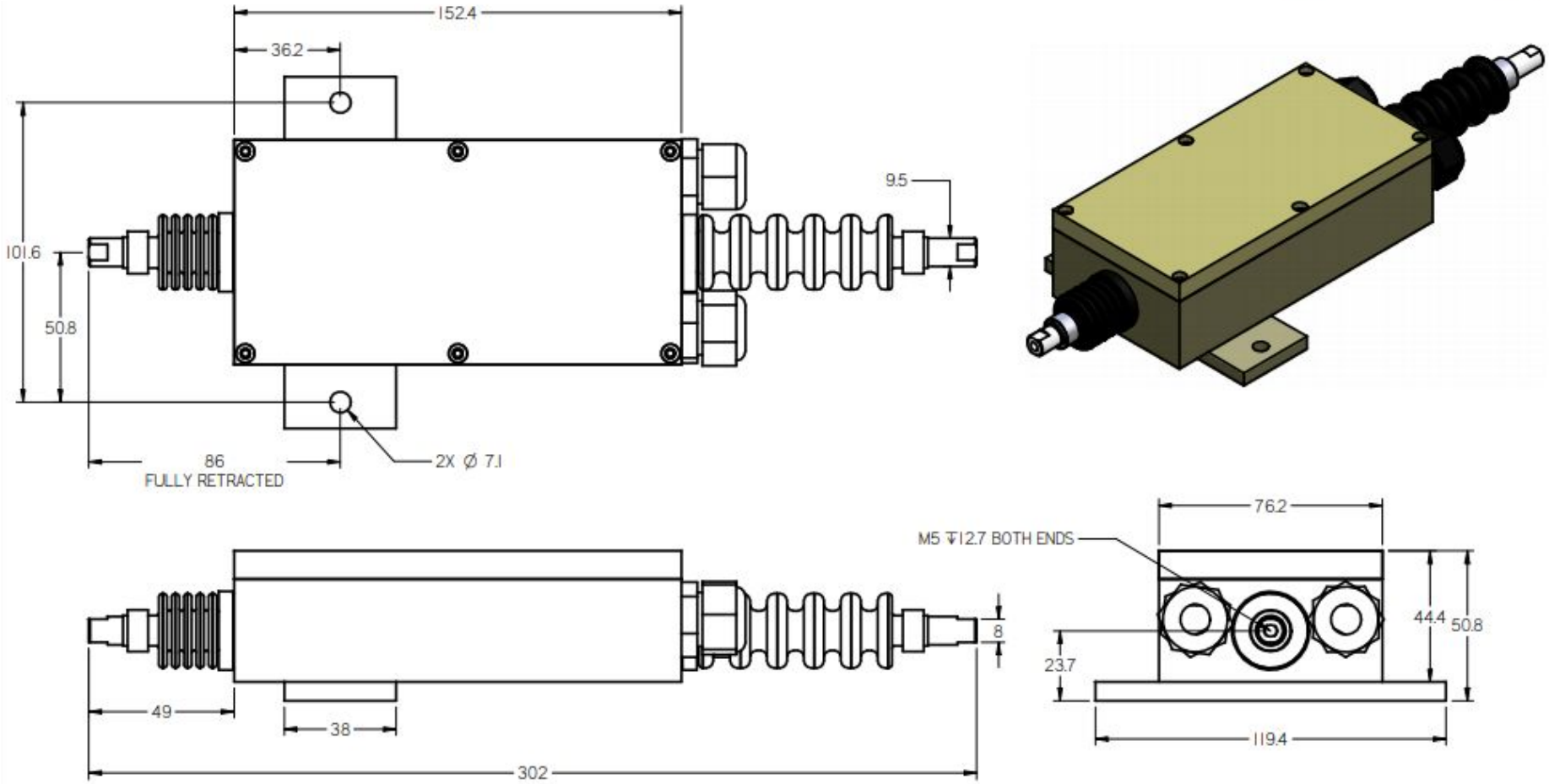

NOTES:

1. ALL DIMENSIONS SHOWN IN MILLIMETERS
2. SHAFT SHOWN IN RETRACTED POSITION, WILL EXTEND 50 MM TO THE LEFT

Installation Guide

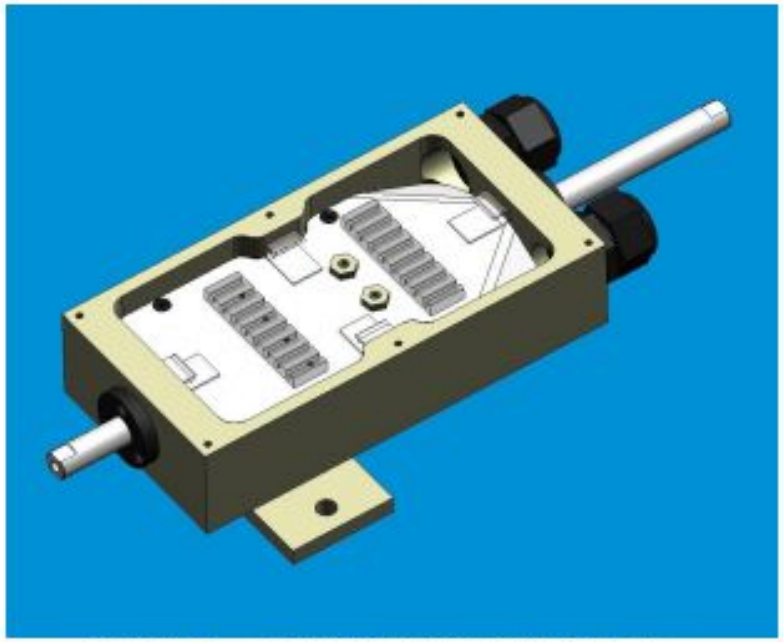

Fig.1. Fusion Splice (FS) Option

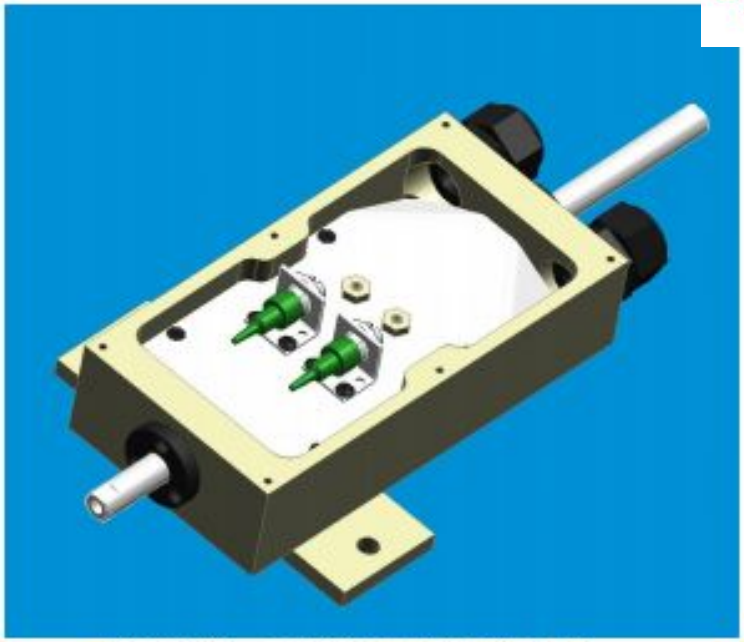

Fig.2. FC/APC Connector (FC) Option

Preparation

The surface must be properly prepared prior to mounting the gage. The surface should be clean and flat where the mounting bracket is to be attached. The component that is to be monitored must move in a direction perpendicular to the axis of the gage. If there is variation in the movement, then a universal joint option should be included in the installation. If it is possible for the travel to extend beyond 50 mm then a safety disconnect should be included in the installation. Both devices can be included in the installation if required.

Installation Guide

- Position the gage on the surface to monitored including any accessory devices.
- Mark the hole locations for the gage then remove the gage and drill two holes for the gage. The gage mount will accept 1/4 or M6 screws.
- Secure the gage in place. Tighten to substrate securely to prevent any movement.
- Determine the range of displacement to be measured and the current relative position of the two parts. Adjust the probe such that the relative position of the probe matches the current displacement between the two parts to be monitored.
- Mark the location of holes required for the probe tip and drill holes. Attach Angle Mount or other attachment plate if used.
- Secure probe to moving substrate with a M5 screw. If a universal joint is not used, be sure that as the substrate moves it does not cause binding in the probe. (See Figure 3 below for a typical installation.) When using a universal joint and/or a safety disconnect, screws are included to easily connect them together. Tighten securely. It is recommended that a threadlocker (ex. Loctite 242) material be used to prevent them from working loose.

Installation Guide

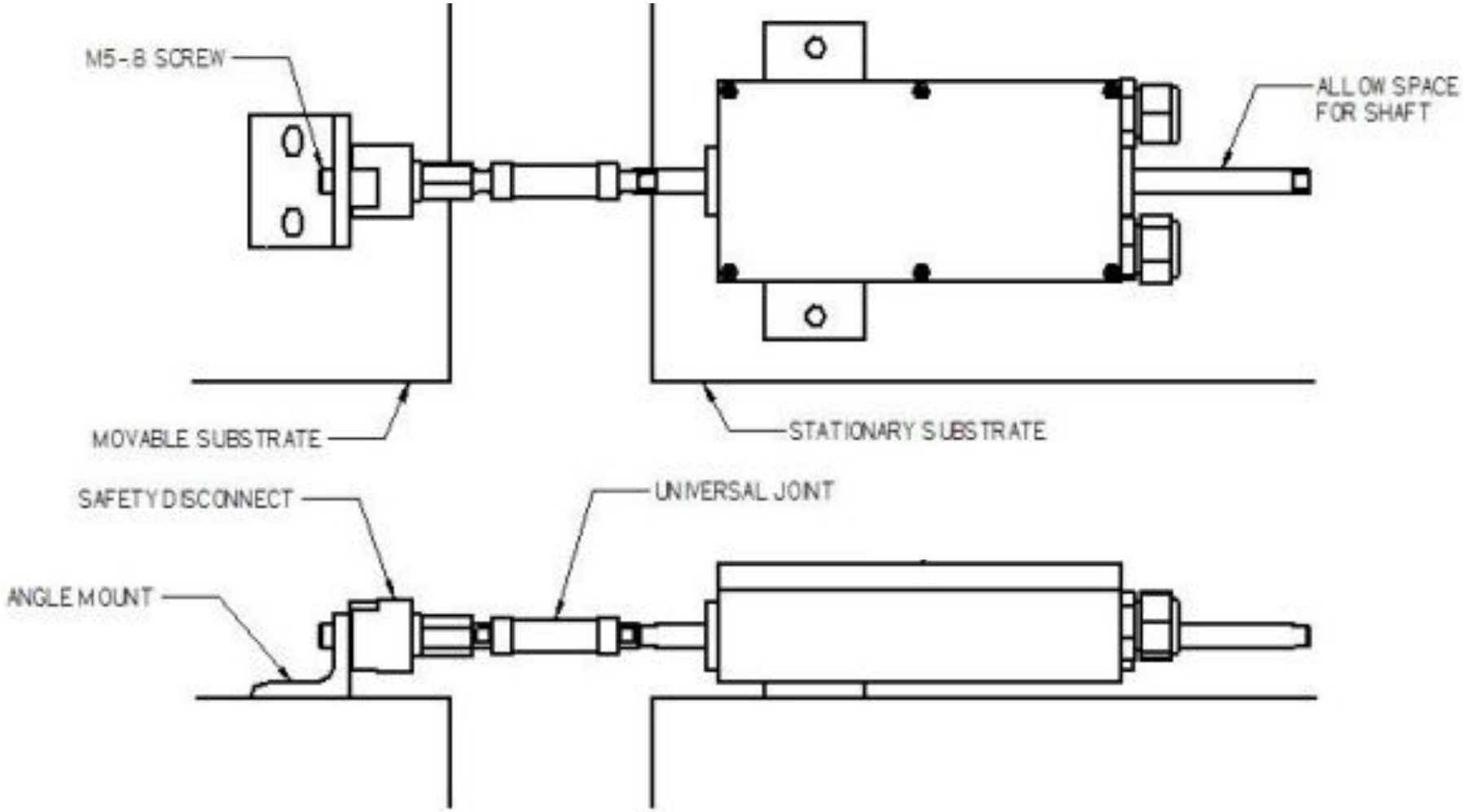

Fig.3. Typical Installation

Installation Guide

Mechanical Protection:

For many installations mechanical protection will be needed to protect the gage from the environment. Environmental option 64 is best suited for indoor applications and should avoid direct high pressure water sprays. If this environment does exist consider using environmental option 67 or provide shielding to protect the gage from direct spray. Environmental option 67 is also best suited for use in dirty and abrasive conditions. If option 64 is used both probe ends should be protected from dirt and abrasive particles.

Optical Connections:

D2 gage is a pass through design that allows connection to the gage inside of the enclosure eliminating the need for a separate junction box. To access the connections, remove the six screws using a 2.5mm hex driver.

Fusion Splice (FS) Option . This option allows the user to fusion splice the two fiber ends directly to the main cables connecting to other gages (see Figure 1). The cable glands will accept cables from 3 to 7 mm diameter.

* Remove the cable jacket to expose the desired buffered fibers. Insert the fiber and cable though the glands and tighten using a 22mm or 7/8 wrench. Note that the cable glands are designed to form a seal only. Mechanical clamping of the cable should be provided outside of the gage to support the cable.

* Prepare to splice the fibers. Approximately one meter of buffered fiber on each end is provided for fusion splicing. Based on the installation location and accessibility to a fusion splicer cut off as much excess fiber as possible to minimize the amount of fiber needed to be coiled up inside of the enclosure.

*Install a splice sleeve on one fiber; prepare the fiber ends and fusion splice. Position the splice sleeve and heat. The splice sleeve should have a shrunk diameter of approximately 3 mm to fit the splice sleeve holder properly.

* Coil the fiber into the trays insuring that there are no sharp bends in the fiber. Tape may be used as necessary to insure that the fibers are held in place. o Install the cover insuring that the o ring gasket is in place and that no fibers will get pinched. Tighten all screws.

Installation Guide

FC/APC Connector (FC) Option. This option allows the user to connect directly to the gage with FC/APC connectors. The connectors will be connected to the FC/APC adapters as shown in Figure 2. The cable glands will accept cable diameters from 3 to 7 mm diameter.

* Remove the cap nuts from the cable glands and remove the cable glands from the gage.
* Remove the seal using a pin as shown in Figure 4 below.

Fig.4. Removing Seal with Pin

* Use a larger pin to open up the end of the gland body to make it easier to reinstall the seal.

Fig.5. Cable Gland Body

* Use a sharp utility knife to slit the seal as shown in Figure 6.
* Slip the seal over the cable behind the connector oriented such that the small diameter end is pointed towards the cap. See Figure 6 below.
* Remove pin from gland body and Insert connectorized cable.
* Push the seal back into the body. Be sure that the slit is aligned and mated together uniformly and is properly seated in the body. Screw on cap by hand.

Installation Guide

* Use a sharp utility knife to slit the seal as shown in Figure 6.
* Slip the seal over the cable behind the connector oriented such that the small diameter end is pointed towards the cap. See Figure 6 below.
* Remove pin from gland body and Insert connectorized cable.
* Push the seal back into the body. Be sure that the slit is aligned and mated together uniformly and is properly seated in the body. Screw on cap by hand.

Fig.6. Weld Locations

* Insert connector into gage and screw in cable gland. Tighten with wrench.
* Clean and attach connector to gage.
* Clamp cable in gland by tightening gland cap. Once seal makes contact with cable jacket, tighten one full turn to seal gland around cable.
* Repeat for other cable.
* Install the cover insuring that the o ring gasket is in place. Tighten all screws.

Hook up displacement gage to instrument and verify that all optical connections are good. Add mechanical protection for the gage as may be required based on the environment that the gage is installed in.

Installation Guide. Calibration

For many installations mechanical protection will be needed to protect the gage from the environment. The gage is rated for IP67 protection. Protection for the wire rope may be needed in harsh environments to protect from ice, snow and animals to insure the best measurement accuracy possible. Suggestions include feeding a portion of the wire rope through a pipe or protect it with a shroud appropriate for the installation conditions.

D2 sensor is a pass through design that allows multiple gages to be installed in series. The gage is available either unterminated (UT) or with FC/APC connectors.

D2 displacement sensor has been calibrated over the entire range at room temperature. The nominal wavelengths indicated in calibration sheet are with the gage fully retracted.
The spectrum width required for each gage can be determined by subtracting 3nm from the wavelength of FBG1 and adding 3nm to FBG2.
If operating over a limited temperature range or displacement range, one can reduce the spectrum width required.

Equation and coefficients

Calculation formulas:

The D2 sensor is calibrated on full operation range and supplied with calculation formula and individual calibration coefficients.
To measure displacement value check two wavelengths with interrogation devices and put them to the following equation of real displacement in millimeters:

$$D = c_3 * \Delta\lambda^3 + c_2 * \Delta\lambda^2 + c_1 * \Delta\lambda + c_0$$

where
$\Delta\lambda = (\lambda_2 - \lambda_1)$

λ_1 and λ_2 - wavelengths of 1st and 2nd FBGs (should be interrogated);

c_0, c_1, c_2, c_3 - calibration coefficients (provided with a calibration sheet).

To provide maximum performance operate D2 sensor together with a high-accuracy interrogating device. It is recommended to use Interrogators with wavelength' measurement accuracy of +/- 2 pm or better.
The accuracy of the Interrogators directly affects the total accuracy of the entire system.

Thank You!

For additional information, please contact us:

Optromix, Inc.
233 Needham St, Suite 540, Newton, MA 02464
phone: +1-617-939-9221
e-mail: info@optromix.com
www.optromix.com